PT80 Digital Delay (No Charge Pump)
Parts Layout Diagram

Version 2012January18
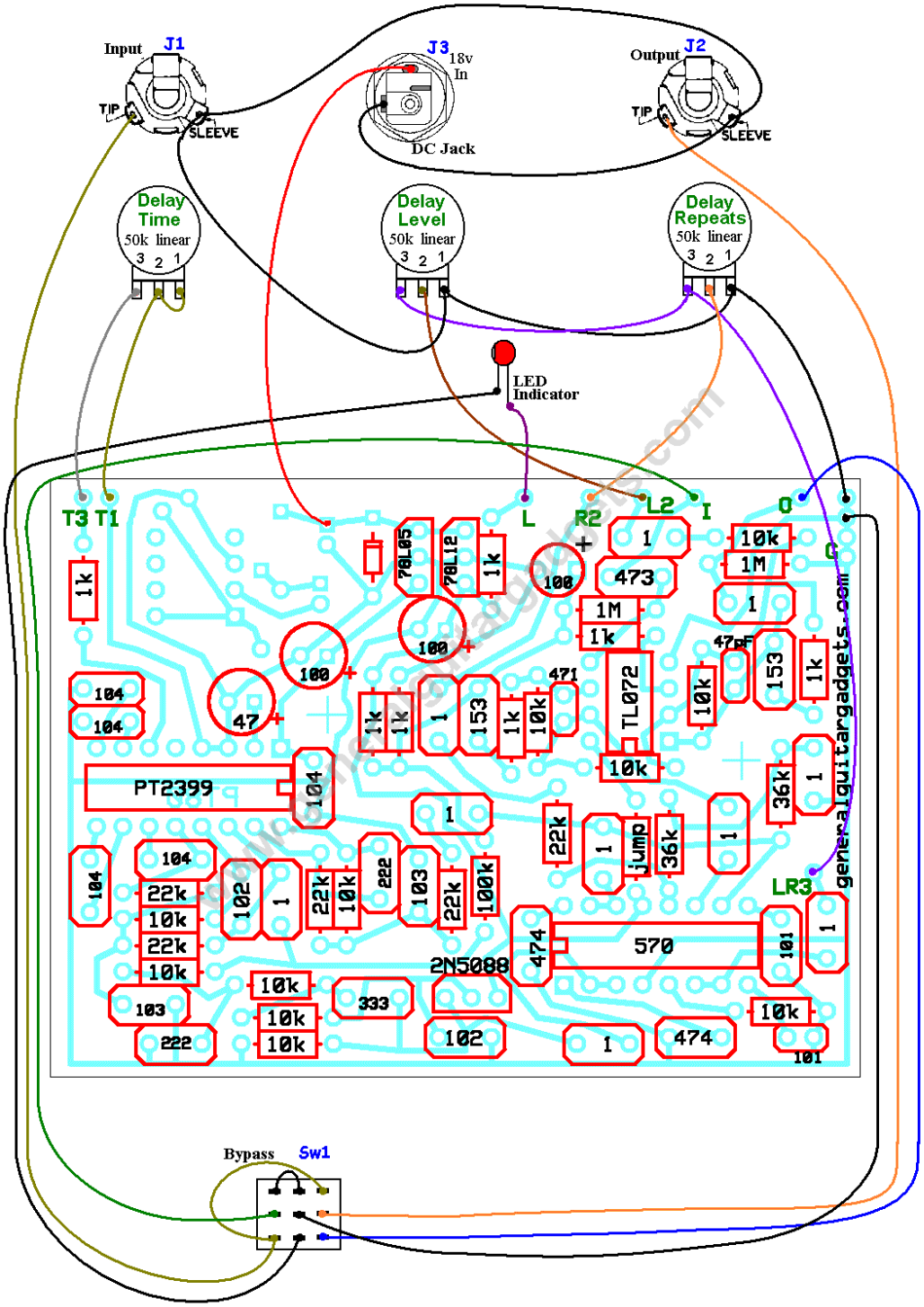
Copyright 2012 JD Sleep
Permission refused for posting/serving this file from any site other than www.generalguitargadgets.com