JOAM - AMZ Version

Version 2010June14

Copyright 2009 JD Sleep
Permission refused for posting/serving this file from any site other than www.generalguitargadgets.com Trademarks are property of their owners

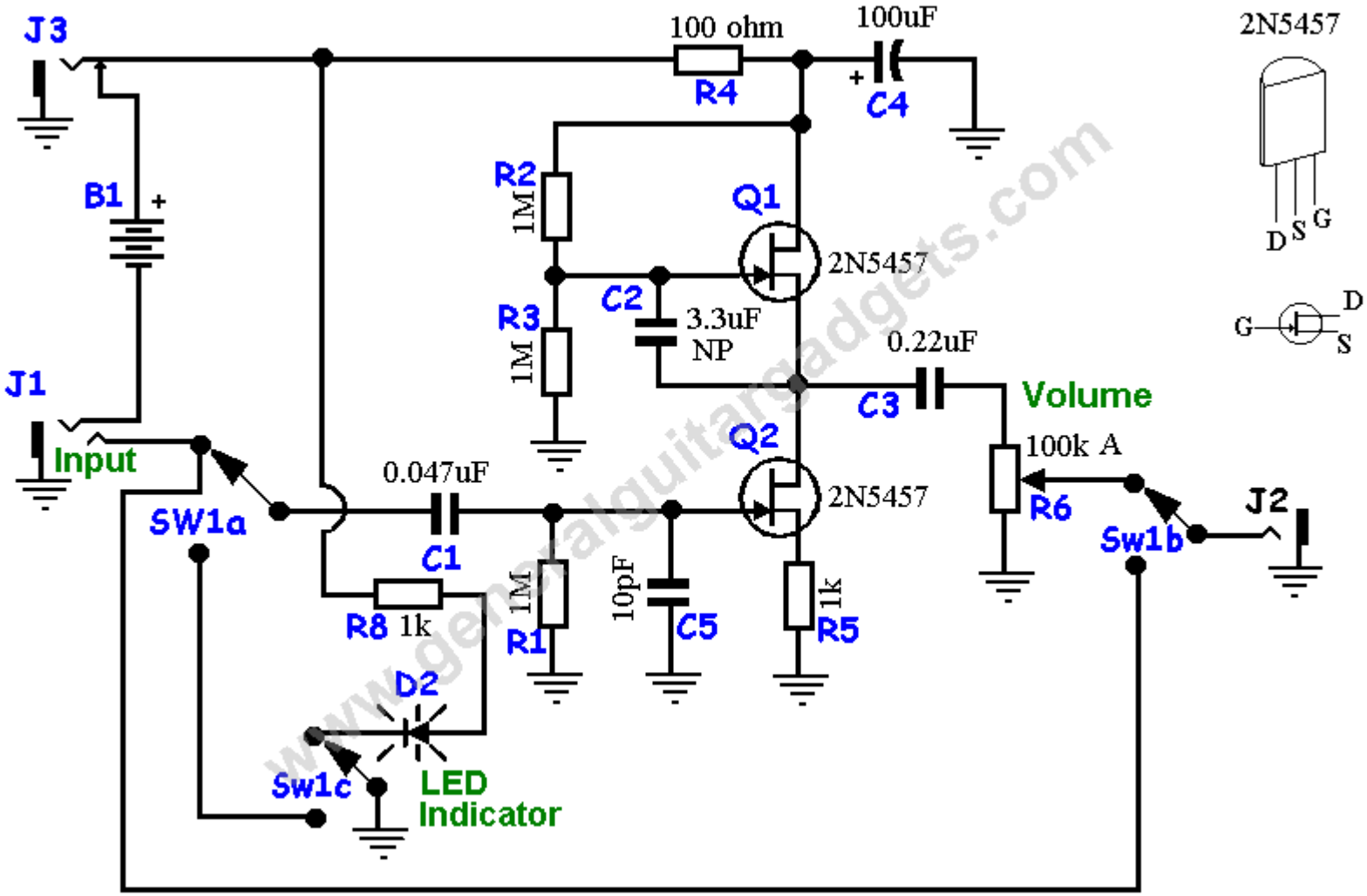

www.generalguitargadgets.com