# ITS8 (Ibanez Tube Screamer 808™ Replica) with no red LED clipper switching

*Version 2019October8*
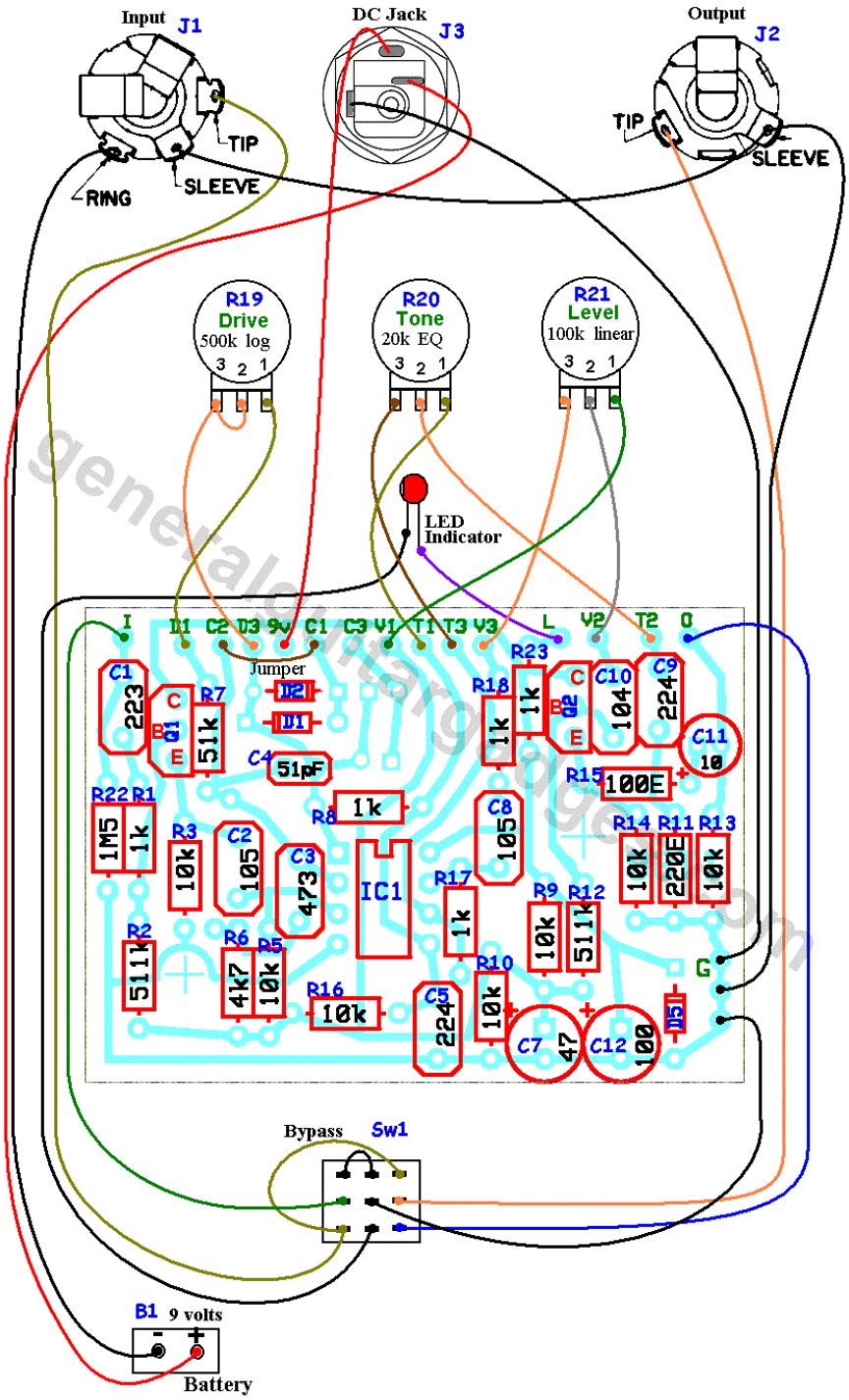
*Copyright 2007, 2019 JD Sleep*
*Permission refused for posting/serving this file from any site other than www.generalguitargadgets.com*
*Trademarks are property of their owners*