GEB - Brian May™ Treble Booster Booster

Version 2009September06

Copyright 2009 JD Sleep

Permission refused for posting/serving this file from any site other than www.generalguitargadgets.com Trademarks are property of their owners

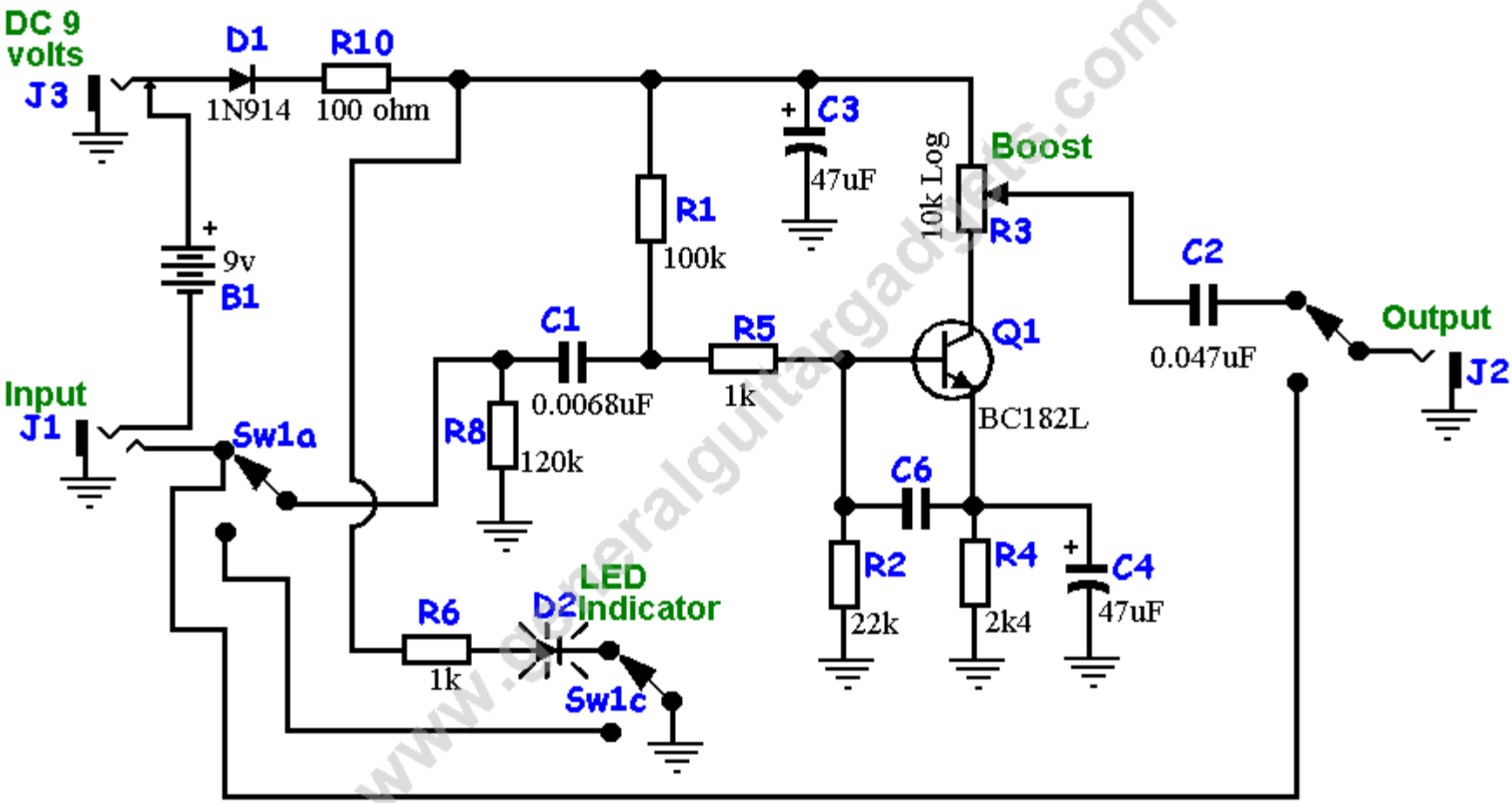

www.generalguitargadgets.com