BSIAB2 (Brown Sound In A Box version2)
With Contour Tone Control

Version 2010January29

Copyright 2009 JD Sleep
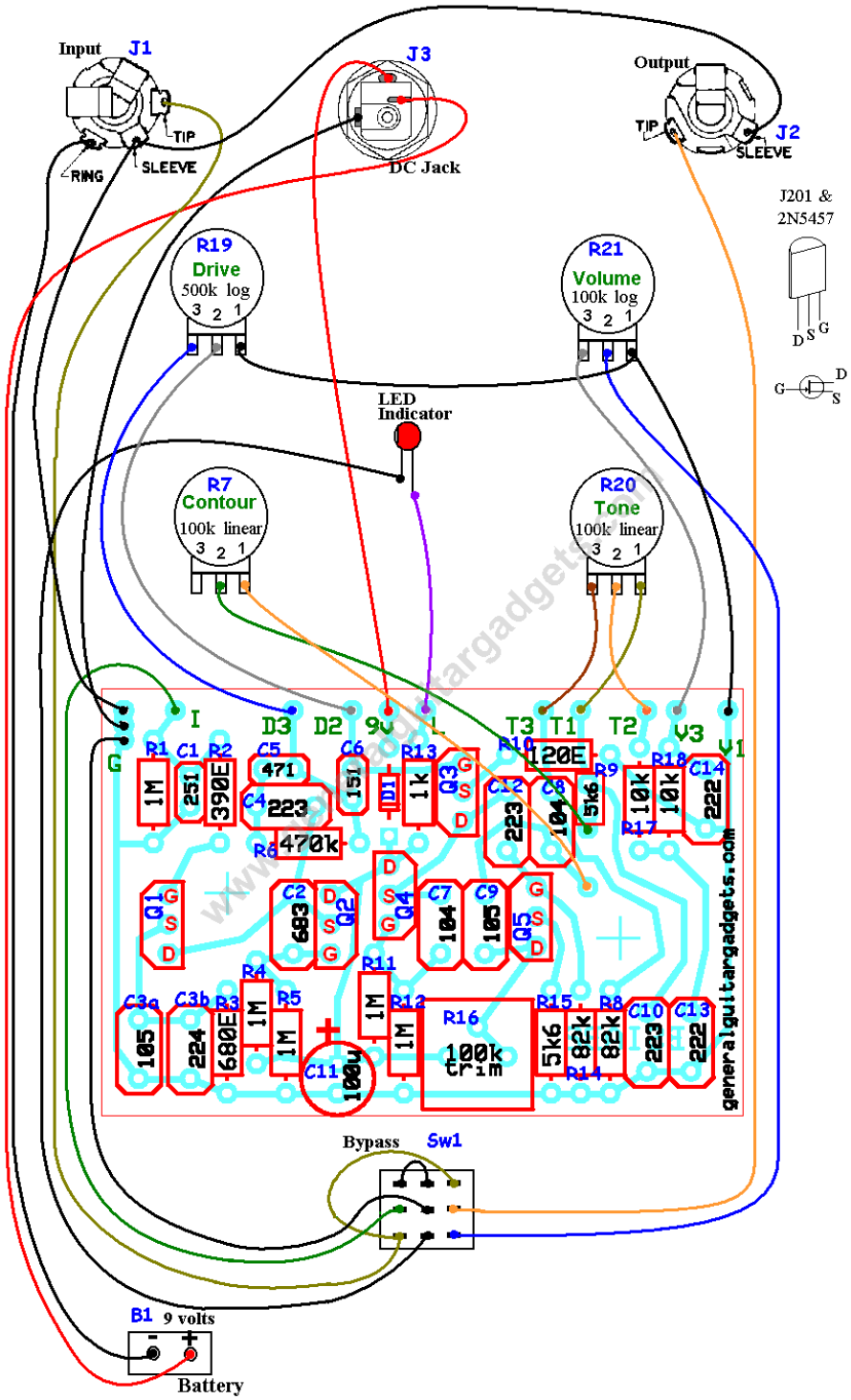
Permission refused for posting/serving this file from any site other than www.generalguitargadgets.com