BMP (EHX™ Big Muff Pi™ Replica)

Triangle Version

Version 2014March24

Copyright 2012 JD Sleep

Permission refused for posting/serving this file from any site other than www.generalguitargadgets.com Trademarks are property of their owners

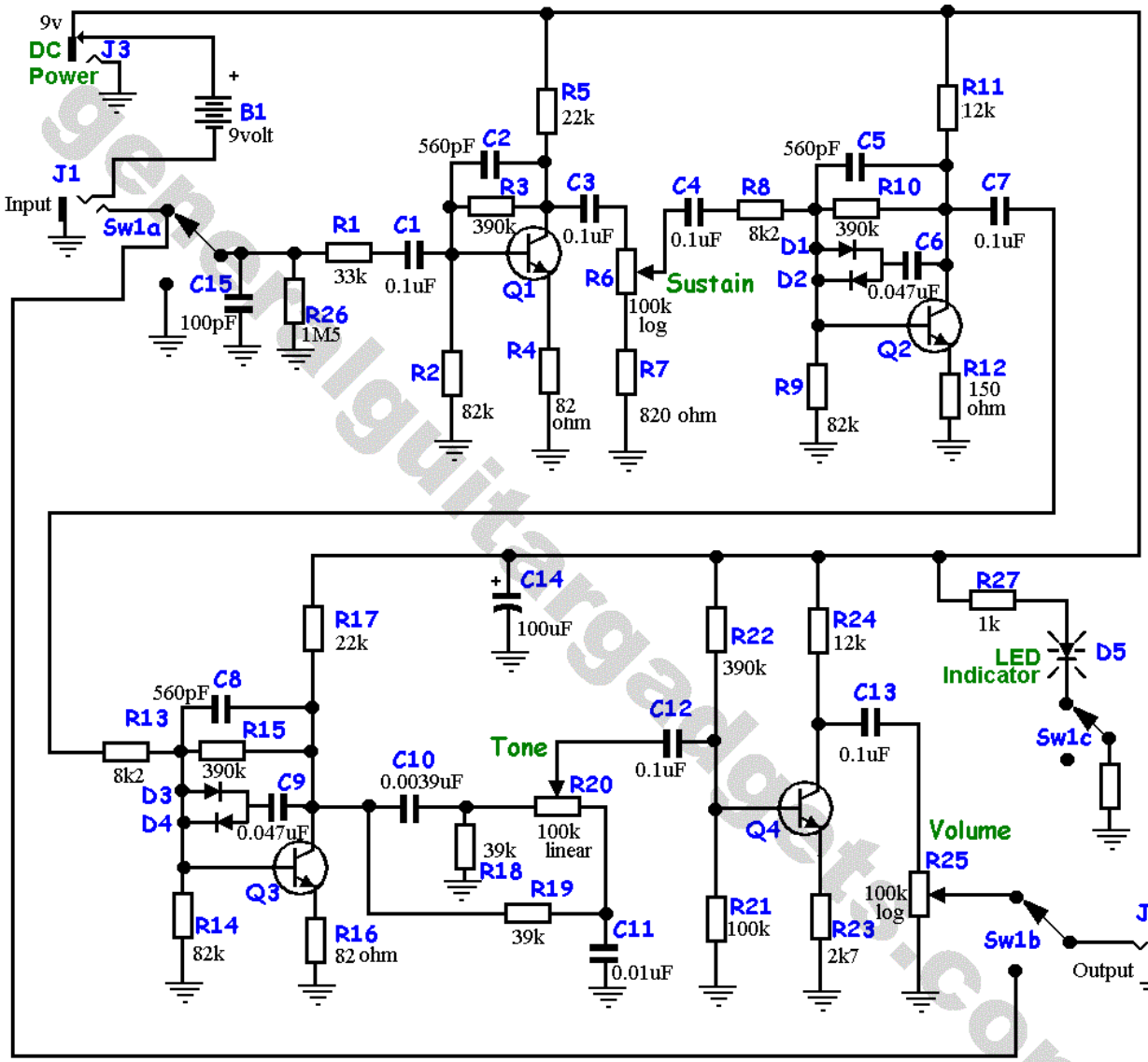

Q1, Q2, Q3 & Q4 - 2N5088 or similar

D1, D2, D3 & D4 - 1N4148 or 1N914

Another Triangle version has these values:

R4: 100 ohm

R16: 100 ohm

These improvements were added and are not found on most original units:

R26, C14 & C15 - Were added to prevent noise and possible switch click.

True Bypass 3PDT switch with LED Indicator and DC Jack